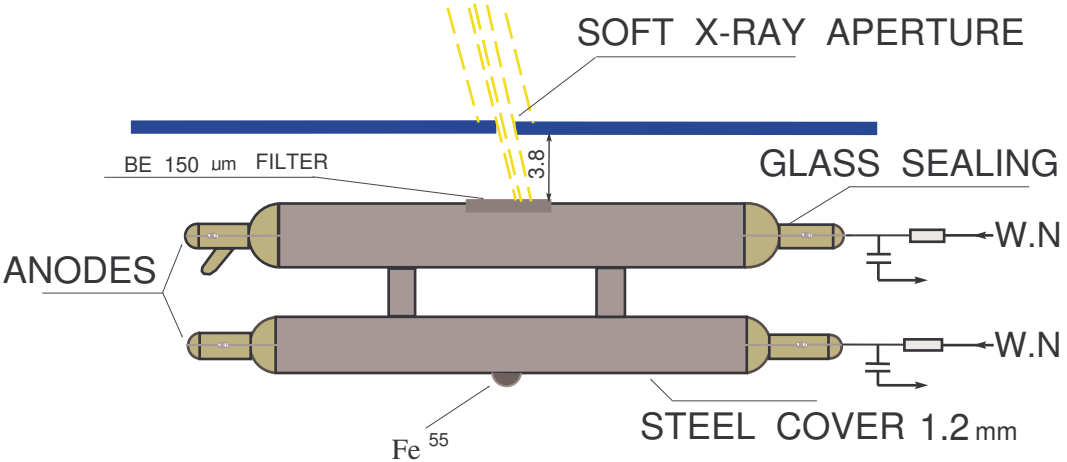
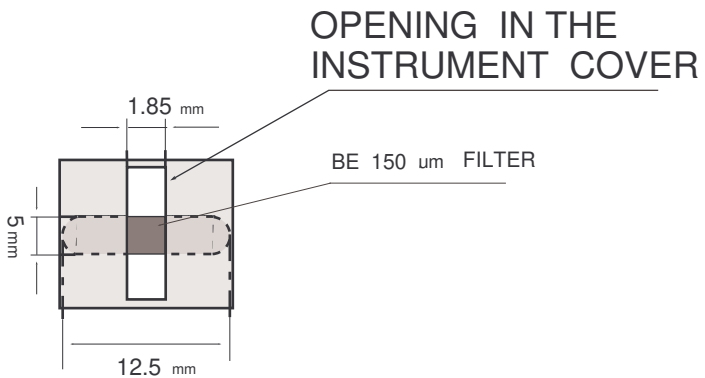
APERTURE DETAILS